Faculty of Engineering & Technology

Department of Computer Science

INTERFACING TECHNIQUES - ENCS 4380

First Semester - 2025/2026

3D Printing Homework

Prepared by:

Samir Ali	**1222350**
Ibrahim Al Ardah	**1220874**
Maen Foqaha	**1220847**
Mohammad Ewais	**1220053**

Sec. 1 & 2

Instructor: Dr. Wasel Ghanem

Date: 25.10.2025

Design Objectives

The main objective of this 3D design was to create a compact, lightweight, and durable chassis for a Micromouse robot that could be easily fabricated using 3D printing. The design focuses on achieving a strong structural framework that maintains balance, accessibility, and a clean aesthetic suitable for competition use.

The chassis was developed with the following key goals:

- **Ease of Fabrication**: Ensure that the entire body can be efficiently produced using standard 3D printing materials with minimal support structures.
- **Structural Strength and Stability:** Provide a rigid frame capable of withstanding vibrations and small impacts while supporting essential components including motors, sensors, and the battery pack.
- **Compact and Balanced Layout:** Maintain a symmetrical and low profile design to achieve even weight distribution, enhancing maneuverability and stability during maze navigation.
- **Accessibility and Modularity:** Integrate mounting holes, open sections, and layered plates that allow easy assembly, disassembly, and maintenance of the robot's components.
- **Aesthetic and Functional Design:** Combine clean, modern geometry with smooth edges and cutouts that not only reduce weight but also contribute to a professional and visually appealing appearance.

Design Approach

The design approach for this Micromouse chassis centered around creating a simple, rigid, and easily manufacturable 3D printed structure that balances practicality, strength, and visual appeal. The robot body was designed with a two-layer configuration connected by sensor-holding side supports, forming a compact and stable frame to hold all main components such as the motors, sensors, control board, and battery pack.

The lower plate is the foundation of the robot, supporting the front mounted sensors and wheels while maintaining sufficient ground clearance to avoid friction during movement. The upper plate provides a mounting space for the battery and microcontroller, keeping heavier components closer to the center to achieve a low and balanced center of gravity essential for accurate and stable navigation within a maze environment. The side walls add rigidity to the chassis while also serving as sensor holders.

From a fabrication standpoint, the design was optimized for 3D printing. The geometry was simplified to include smooth contours, uniform wall thickness, and minimal overhangs, allowing the model to print without the need for excessive support. Mounting holes and slots were incorporated with proper 3D printing tolerances to ensure that sensors, screws, and other hardware could be easily installed after printing.

The open, layered architecture also ensures accessibility and modularity. Each component such as the wheels, motors, and sensors can be installed or removed without disassembling the entire robot. This design choice supports quick maintenance and easy upgrades during the testing phase. Additionally, the top plate includes cutouts and openings for wire routing, ensuring a neat and organized layout.

Aesthetically, the design integrates a clean and modern appearance with smooth curves and uniform alignment between layers. The use of colors and symmetrical structure enhances visibility and gives the Micromouse a professional, finished look for presentation and competition display.

Key design highlights include:

- Two layer chassis structure for stability and easy component separation.
- Centralized layout for balanced weight distribution and low center of gravity.
- Optimized geometry for efficient 3D printing with minimal support.
- Accessible design for fast assembly and maintenance.
- Clean aesthetic emphasizing symmetry.

Screenshots/3D Rendering of The Robot

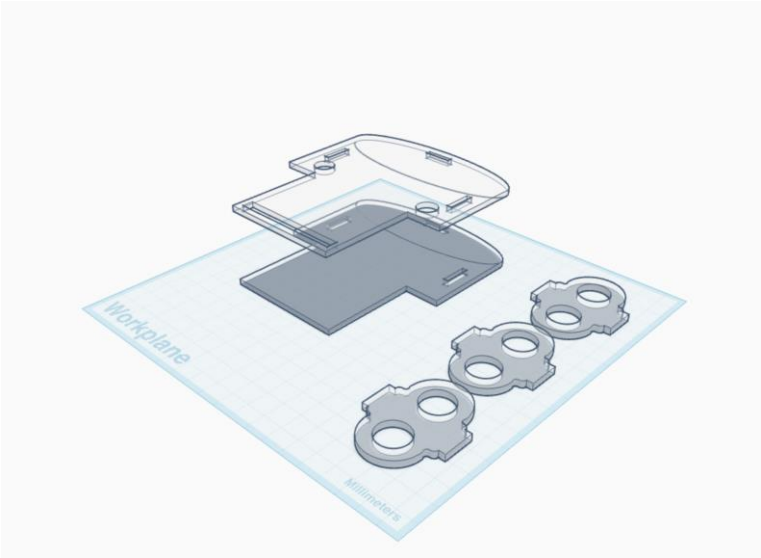

Figure 1: 3D Printed Base – Perspective View

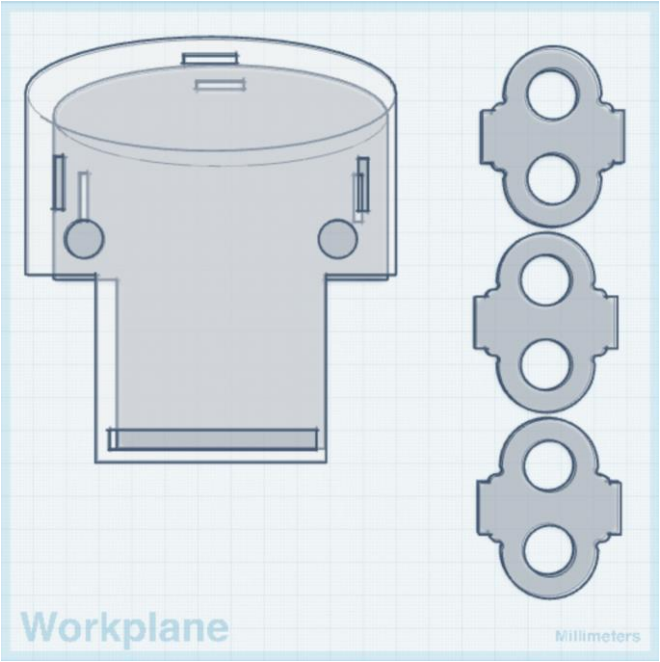

Figure 2: 3D Printed Base – Flat Top View

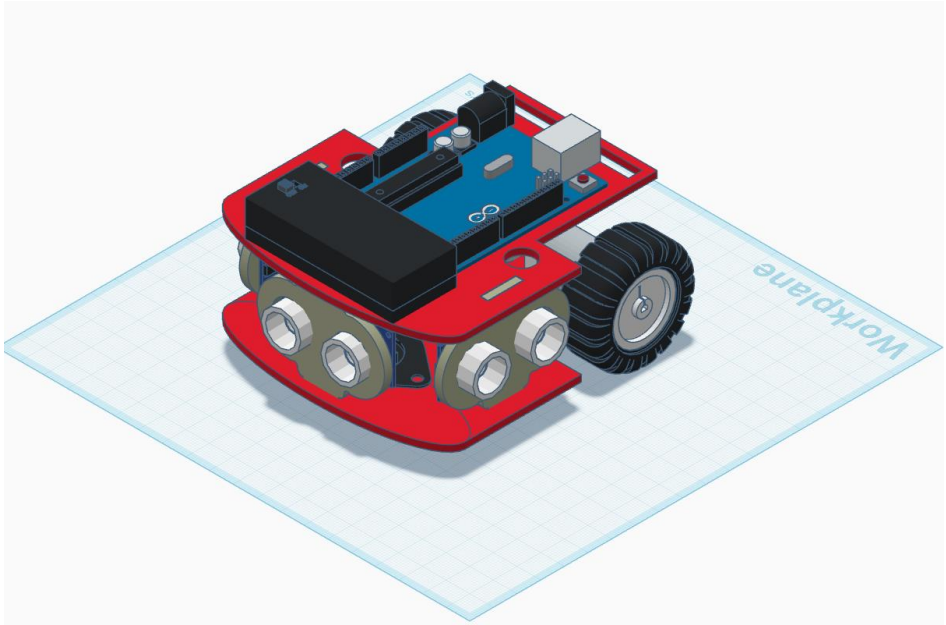

Figure 3: 3D Robot Render – Perspective View

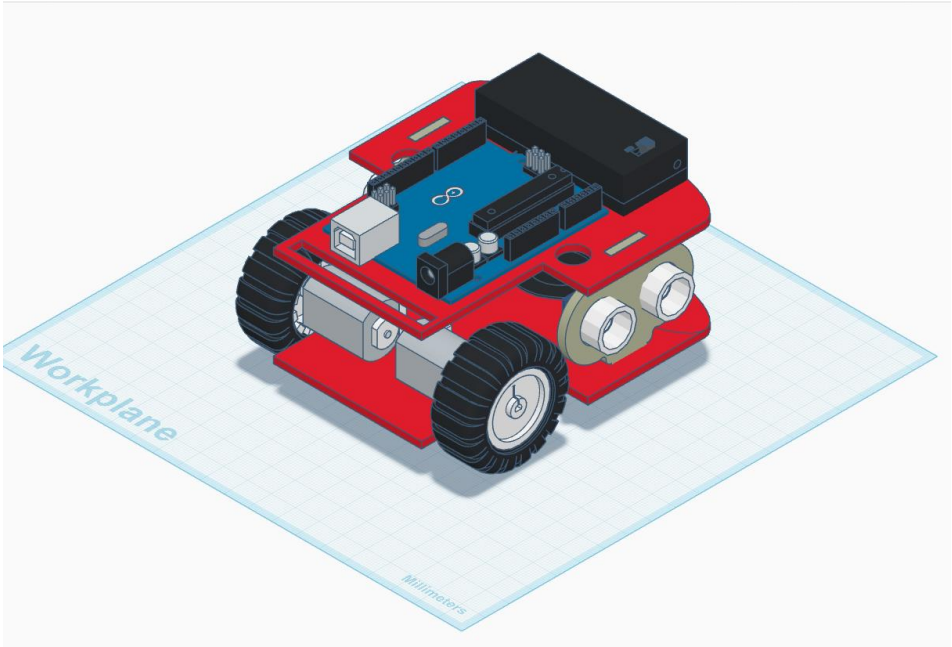

Figure 4: 3D Robot Render – Perspective View

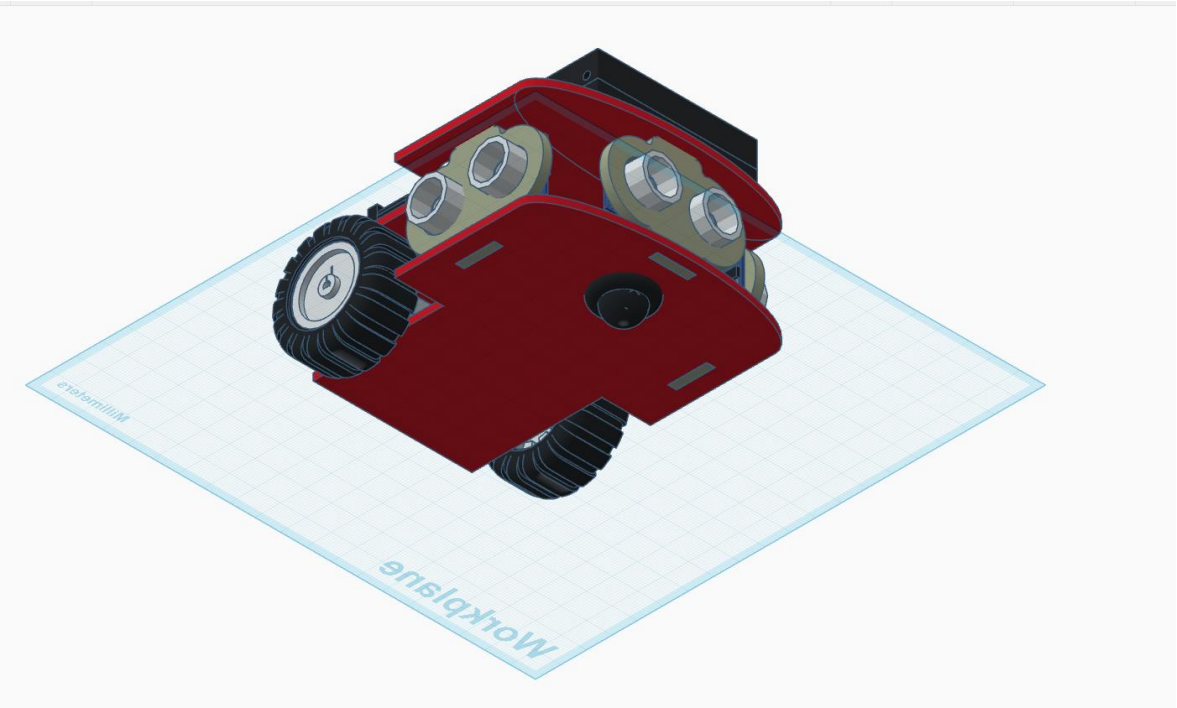

Figure 5: 3D Robot Render – Perspective View

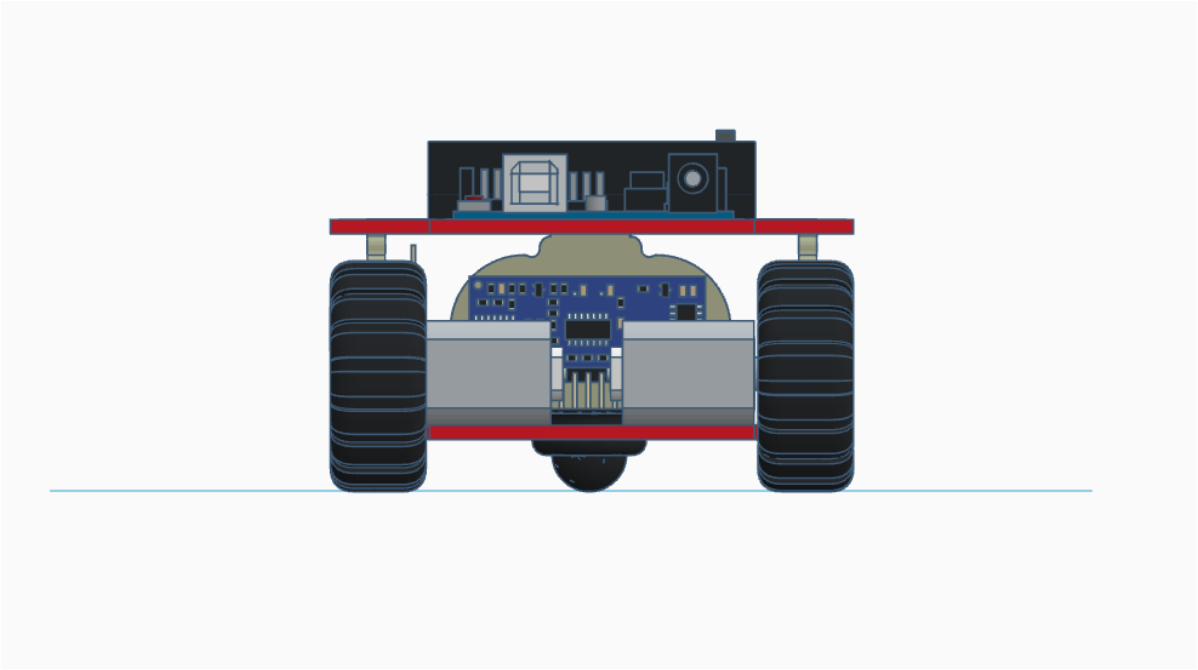

Figure 6: 3D Robot Render – Flat View (Back)

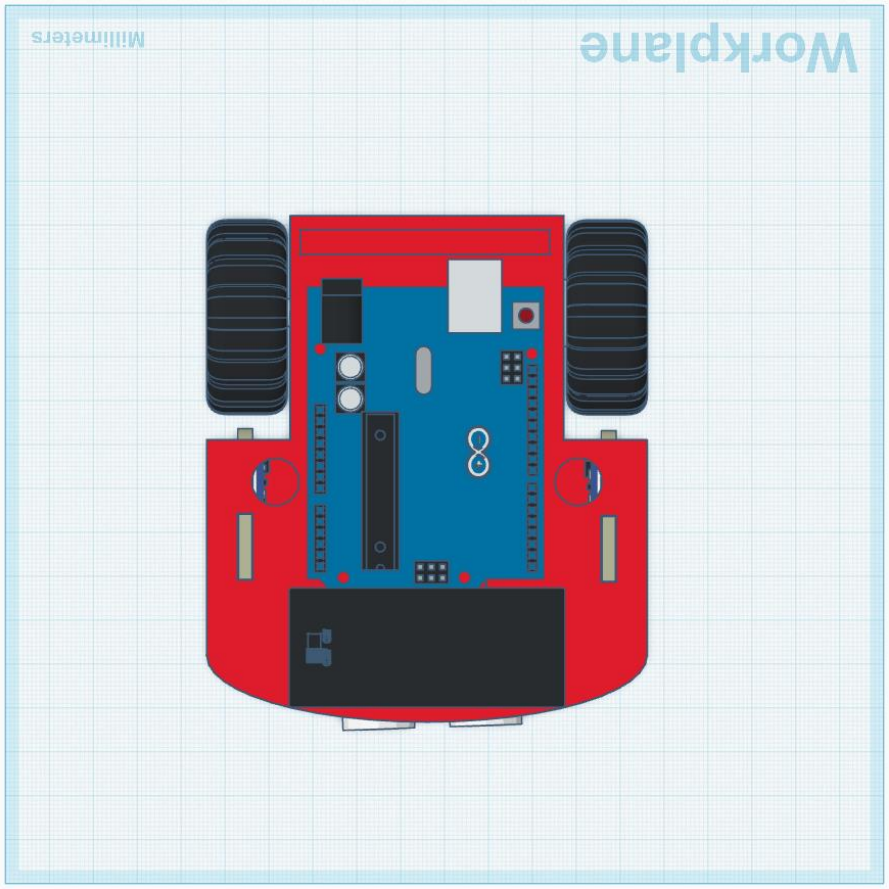

Figure 7: 3D Robot Render – Flat View (Top)

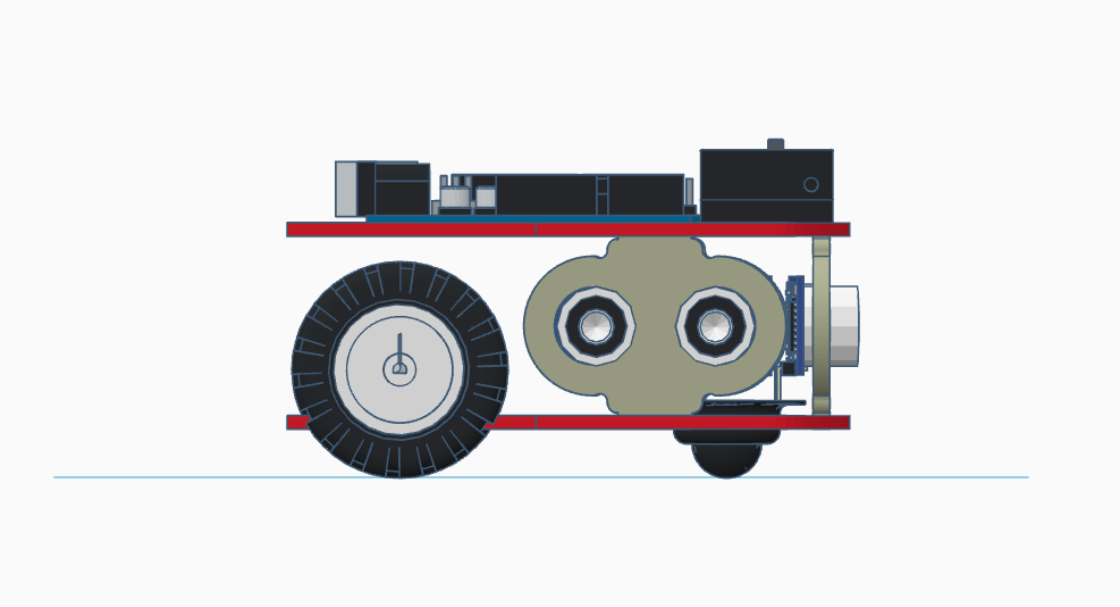

Figure 8: 3D Robot Render – Flat View (Side)

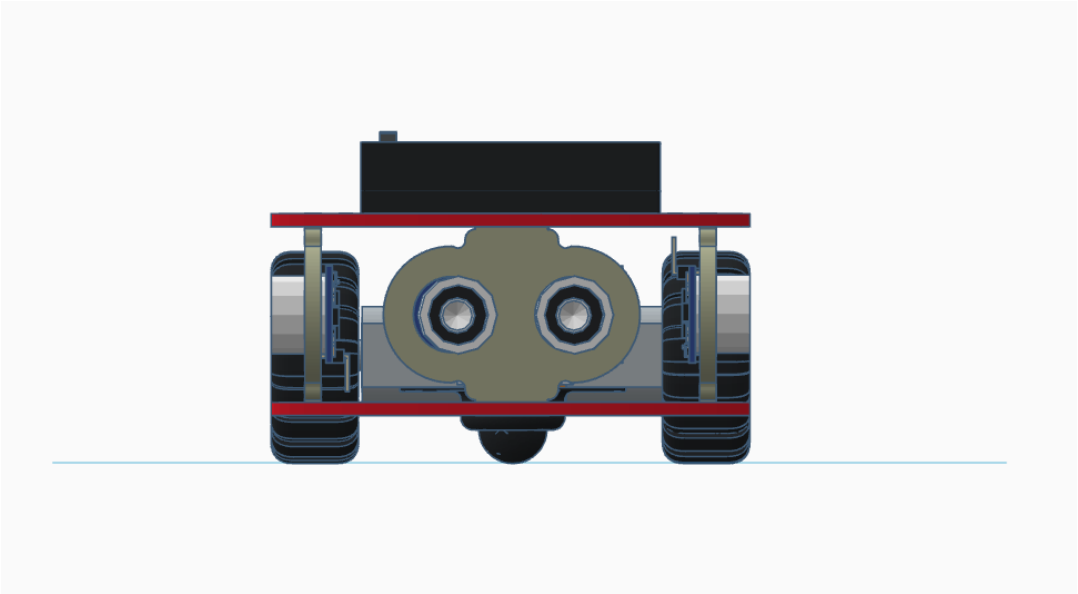

Figure 9: 3D Robot Render – Flat View (Front)

Explanation of Chosen design features and their purpose

The design of the Micromouse chassis focuses on achieving a balance between simplicity, structural rigidity, and ease of manufacture through 3D printing. The chassis features a two layer configuration connected by sensor supporting side walls, creating a compact and stable framework capable of securely housing all key components including the motors, sensors, control board, and battery pack.

The lower plate functions as the robot's structural base, supporting the wheels and front-mounted sensors while maintaining ground clearance to prevent friction during running. The upper plate provides mounting points for the battery and microcontroller, positioning heavier components near the center to maintain a low and balanced center of gravity, which is crucial for precise navigation within a maze. The side supports not only increase the overall rigidity of the chassis but also serve as convenient mounting points for sensors, ensuring consistent alignment and stability.

From a manufacturing perspective, the design is optimized for efficient 3D printing. It features smooth contours, uniform wall thickness, reducing the need for excessive support structures and improving print quality. Predefined mounting holes and slots with appropriate tolerances allow for easy installation of hardware after printing.

The open and modular layout enhances accessibility, enabling individual components such as motors, wheels, and sensors to be installed or replaced without dismantling the entire assembly. This modularity facilitates quick maintenance and upgrades during testing. Additionally, cutouts on the top plate provide clear pathways for cable management, resulting in a tidy and organized internal layout.

Aesthetically, the chassis presents a clean, modern appearance with smooth curves and a symmetrical form. The use of bright, contrasting colors improves visibility and gives the Micromouse a polished, professional look suitable for competition and display.

Key design features and their purposes include:

- Two layer chassis: Enhances structural stability and simplifies component organization.
- Centralized component layout: Promotes balanced weight distribution and a low center of gravity.
- 3D printing optimization: Ensures easy, reliable fabrication with minimal support material.
- Modular accessibility: Simplifies assembly, maintenance, and component replacement.
- Refined aesthetics: Provides visual appeal through symmetry and clean design lines.

Summary of Tools and Methods Used

The design of the Micromouse chassis was developed using Tinker cad, a 3D modeling software for prototyping and design projects. Tinker cad's user interface and block based modeling tools allowed for precise control over dimensions, alignment, and component placement. The design process involved creating individual parts such as the upper and lower plates, side supports, and sensor mounts, which were then assembled virtually to evaluate fit and functionality. The software’s perspective features enabled easy inspection of the chassis from multiple angles, ensuring proper spacing for components and efficient weight distribution. Once the final design was completed, the model was exported to STL format for 3D printing. This workflow allowed for efficient iteration, quick modifications, and accurate translation of the digital design into a physical prototype.